NO.	4E300S-2021-A0

freddox

SPECIFICATION

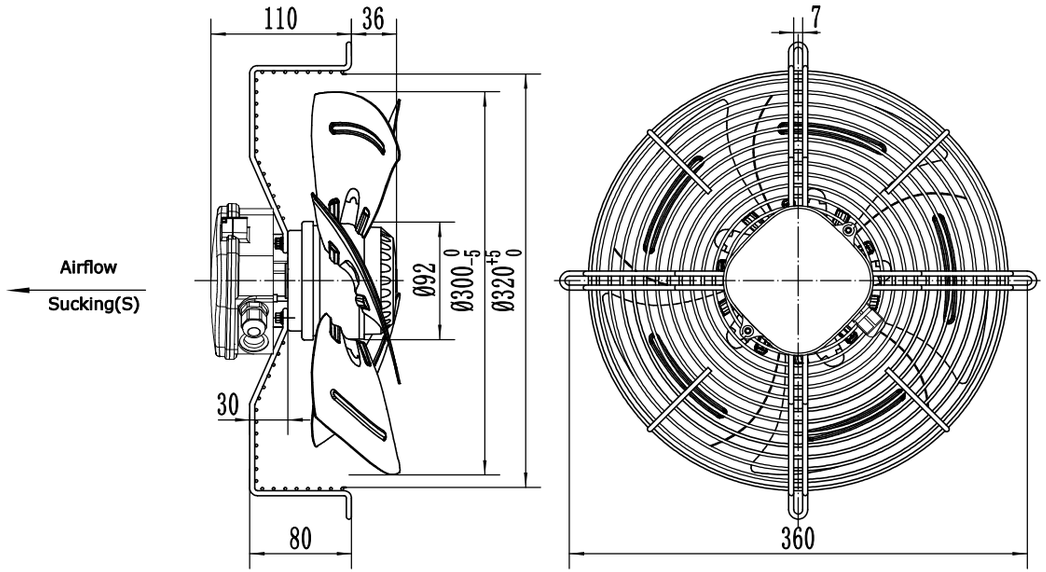

UNIT	Axial fan motor
MOTOR	Single phase motor with capacitor
MOTOR TYPE	YWF4E-300S-92/35-G
VOLTAGE (V)	220
FREQUENCY (Hz)	50
INPUT POWER (W)	85
CURRENT (A)	0.42
SPEED (r/min)	1380
AIR FLOW 20Pa (m^3/h)	1690
NOISE (dBA)	60
CAPACITOR (μF/450V)	3
ROTATION	CW ,looking into the end-shield
INSULATION CLASS	F
MOTOR PROTECTION	Thermocontact 150±5℃
TEMPERATURE RISE	75K max
TYPE OF PROTECTION	IP54
OPERATING TYPE	S1
AMBIENT TEMPERATURE	-30°C +60°C
BEARINGS	Ball bearings
MOUNTING TYPE	Horizontal or Vertical
ELECTRICAL CONNECTION	Lead wire RV-90 4G 0.50mm² ,Length 100mm in terminal box connected
APPROVALS	CCC、CE
NET WEIGHT/GROSS WEIGHT	3.0/4.0kg
PACKING	34*34*18cm

LABEL：

FLOW RATE CURVE：

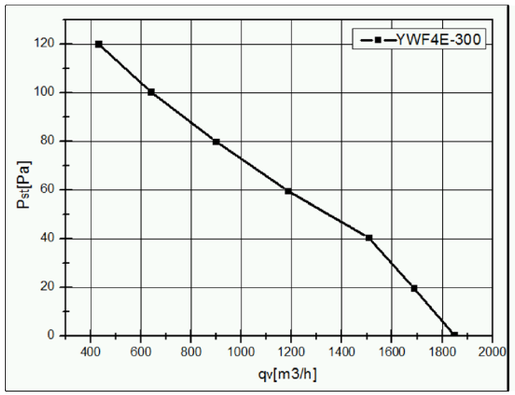

WIRING DIAGRAM：

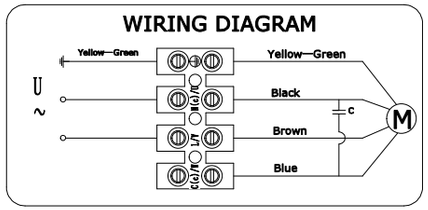

							SIGN	DATE	TITLE YWF4E-300S-92/35-G
						DRN. BY			
						CHD. BY			PROJECTION
						ENG. BY			A4
REV.	DESCRIPTION	APPROVED	DATE			APP. BY			SCALE / SHEET: of